FUSION® SG-DA41400
Class-D Marine Amplifier
User/Installation Manual

FUSION®

FUSIONENTERTAINMENT.COM

AMPLIFIER SPECIFICATIONS

Peak Power (Watts)	1400
Frequency Response	10Hz -65kHz
Dimensions (mm)	300(l) x 210(w) x 50(h) 11-13/16 x 8-1/4 x 2”
Power Ratings	150W RMS x 4 @ 4Ω 1% THD+N
	220W RMS x 4 @ 2Ω 1% THD+N
	440W RMS x 2 @ 4Ω Bridged 1% THD+N

INSTALLATION GUIDELINES

1. Ensure the +12V lead is disconnected from the battery before you connect any new equipment.
2. Ensure the mounting location will not interfere with the gas tank or electrical wiring.
3. Ensure the Amplifier is securely fastened to the vessel to prevent injury in the event of an accident.
4. Ensure all wiring is protected to avoid pinching or crushing which could result in damage to the audio system.
5. Ensure the mounting location has sufficient air flow around the amplifier. If the amplifier is mounted in an enclosed space a 3” fan with ducting should be used to aid in air flow.
6. Ensure you use the recommended gauge wire/cable for all amplifier connections.
7. Note: we do not recommend mounting your amplifier in close proximity to other bridge-mounted equipment critical to safe navigation of your vessel, in close proximity to receiving antennas, or near radio-communications equipment mounted on your vessel.

+12V CONNECTION

FUSION amplifiers should be connected directly to the +12V battery terminal via a 4 gauge cable with an inline fuse or circuit breaker as close to the battery as possible.

GROUND CONNECTION

Connect directly to the vessel’s earth system via a 4 gauge cable. **NOTE**: This is the first wire to connect up during the installation.

REMOTE TURN-ON CONNECTION

This connection turns the amplifier on & should be connected to the remote turn on wire from the Head Unit. If one is not available a switched 12v source must be used.

WIRING

Ensure the audio system is turned off before making any connections to the amplifier, speakers or source unit, failure to do so could result in permanent damage to the audio system.

When wiring the FUSION amplifier ensure that the cable is protected from sharp objects and always use rubber grommets when wiring through metal panels.

Ensure all terminals and connections are protected from the vessel chassis and from each other as failure to do so could result in permanent damage to the audio system.

RCA INPUTS

Choose the correct length RCA cable & run them to the RCA outputs of the source/head unit, avoiding running beside other looms & or power cable.

LEVEL CONTROL

This control is used to match the input level of the amplifier to the output level of the head unit. We recommend the following method. NOTE: Remove screws and the top cover of amplifier to access controls.

1. Turn the amplifier level to zero
2. Turn the volume of the head unit to 3/4 and the tone settings to zero
3. Adjust the level control until the desired maximum volume is achieved without distortion.
4. Failure to follow these steps may cause permanent damage to the audio system.

CROSSOVER TABLE

	Crossover Type	Crossover Frequency	Bass Boost
Zone 1	Selectable - LPF, HPF, or FULL	LPF or HPF Tunable - 32Hz - 320Hz	
Zone 2	Selectable - LPF, HPF, or FULL	LPF or HPF Tunable - 32Hz - 320Hz	Tunable - 0dB - 12dB

TROUBLE SHOOTING

Problem	Possible Reason	Solution
Amplifier not switching on. Power LED not 'on'.	No +12v to power wire No power to remote wire Fuse broken Fuse on amplifier blown	Check fuses and connections to battery Check remote on connections to head unit Replace fuse with correct type and amperage Replace fuse with correct type and amperage
Amplifier not working, but Power LED is 'on'	Amplifier too hot Speaker wires shorted	Move amplifier to vented area Turn head unit down Check that there are no speaker wires shorted to other wires
No Sound	No RCA Signal Gain control not set up Head Unit off or low vol Amplifier Speakers	Check RCA connection to head unit Ensure you have set up the amplifier gain level control Check head unit volume level Check all power, remote on and ground Check connections Check speaker connections

AMPLIFIER DIMENSIONS

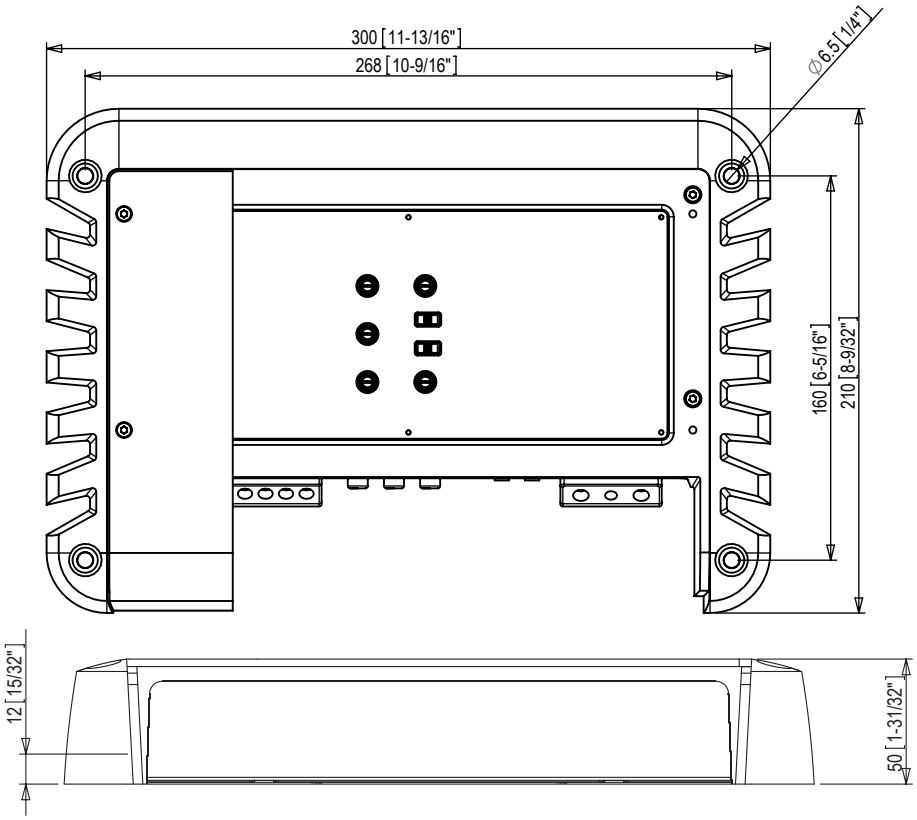

All dimensions provided are in millimeters (mm) unless indicated

CONTROL DESCRIPTIONS

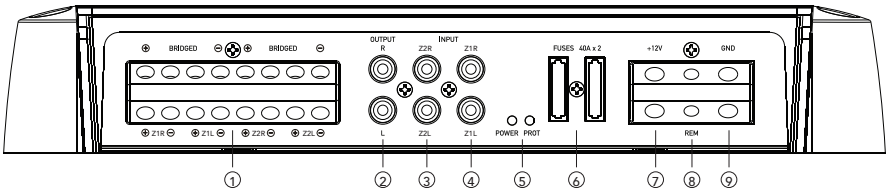

1. SPEAKER OUTPUT:
Connect your speakers to these terminals.

2. RCA OUTPUT:
Use these RCA connectors to connect to a secondary amplifier. This output is a pass-thru connection derived from the RCA input connectors so that the signal level and frequency response is the same as the original input signal.

3. ZONE 2 RCA INPUT:
Connect these RCA connectors to a head unit with low level output connection.

4. ZONE 1 RCA INPUT:
Connect these RCA connectors to a head unit with low level output connection.

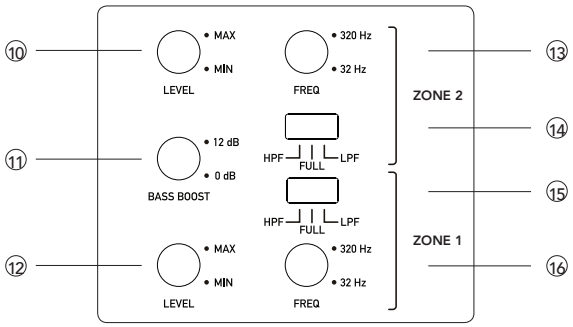

5. POWER AND STATUS LED'S:
This displays "green" if the amplifier has been correctly powered up and 'red' if any faults are present.

6. FUSES:
Please ensure the correct type of fuse is fitted. For SG-DA41400 2 x 40A fuses.

7. +12V CONNECTION:
Connect directly to the vessel battery positive (+) terminal via a 4 gauge cable, with an inline fuse or circuit breaker at the battery end. **NOTE**: This is the last wire to connect up during installation. Damage could result if this is not done.

8. REMOTE TURN-ON CONNECTION:
This terminal is for turning the amplifier on & off. The remote input requires a switched positive (+12V) to power 'ON' the amplifier. This can usually be found on the rear of the head unit in the form of a remote output.

9. GROUND CONNECTION:
Connect directly to the vessel's earth system via a 4 gauge cable. **NOTE**: This is the first wire to connect up during the installation.

10. ZONE 2 LEVEL:
This allows level adjustment of the zone 2 input signal. Use this control to directly match the head unit to the amplifier. To set this control correctly, turn the amplifier level to MIN and the head unit to 3/4 volume, with the tone settings on zero, then slowly turn up the level control towards the MAX end of the control. **NOTE**: If the sound becomes distorted, turn this control down.

11. BASS BOOST:
The Bass Boost is a variable control to increase the level at 45Hz from 0 - +12dB of gain. Adjust this control with extreme care.

12. ZONE 1 LEVEL:
This allows level adjustment of the zone 1 input signal. Use this control to directly match the head unit to the amplifier. To set this control correctly, turn the amplifier level to MIN and the head unit to 3/4 volume, with the tone settings on zero, then slowly turn up the level control towards the MAX end of the control. **NOTE**: If the sound becomes distorted, turn this control down.

13. ZONE 2 FILTER FREQUENCY:
This sets the crossover frequency point for the zone 2 filter between 32Hz and 320Hz. **NOTE**: Failure to correctly set could result in speaker damage.

14. ZONE 2 FILTER SELECTION:
This switch selects the type of filter used for the zone 2 audio signal. Either Low Pass, High Pass or Full Range can be selected. The Low Pass filter is designed to filter out all mid to high frequencies that only full range speakers should produce. The High Pass filter is designed to filter out all low frequencies that only subwoofers should produce. Full Range allows all frquencies.

15. ZONE 1 FILTER SELECTION:
This switch selects the type of filter used for the zone 1 audio signal. Either Low Pass, High Pass or Full Range can be selected. The Low Pass filter is designed to filter out all mid to high frequencies that only full range speakers should produce. The High Pass filter is designed to filter out all low frequencies that only subwoofers should produce. Full Range allows all frquencies.

16. ZONE 1 FILTER FREQUENCY:
This sets the crossover frequency point for the zone 1 filter between 32Hz and 320Hz. **NOTE**: Failure to correctly set could result in speaker damage.

INSTALLATION INSTRUCTIONS

2 CHANNEL INSTALLATION

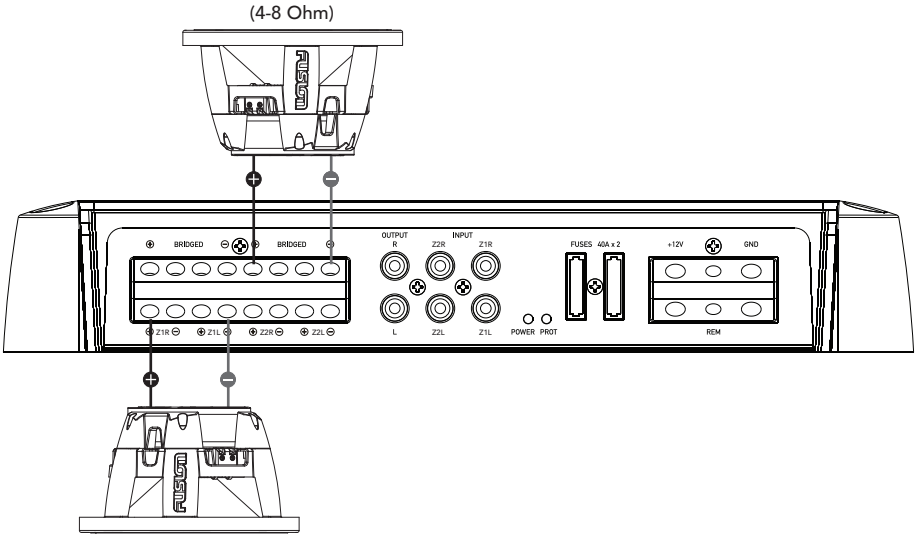

3 CHANNEL INSTALLATION

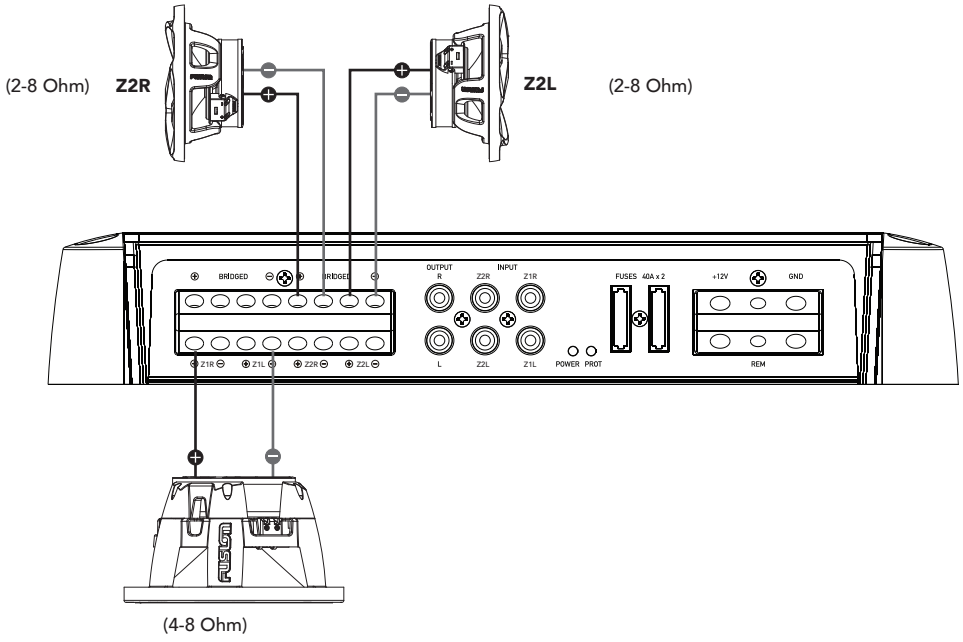

4 CHANNEL INSTALLATION

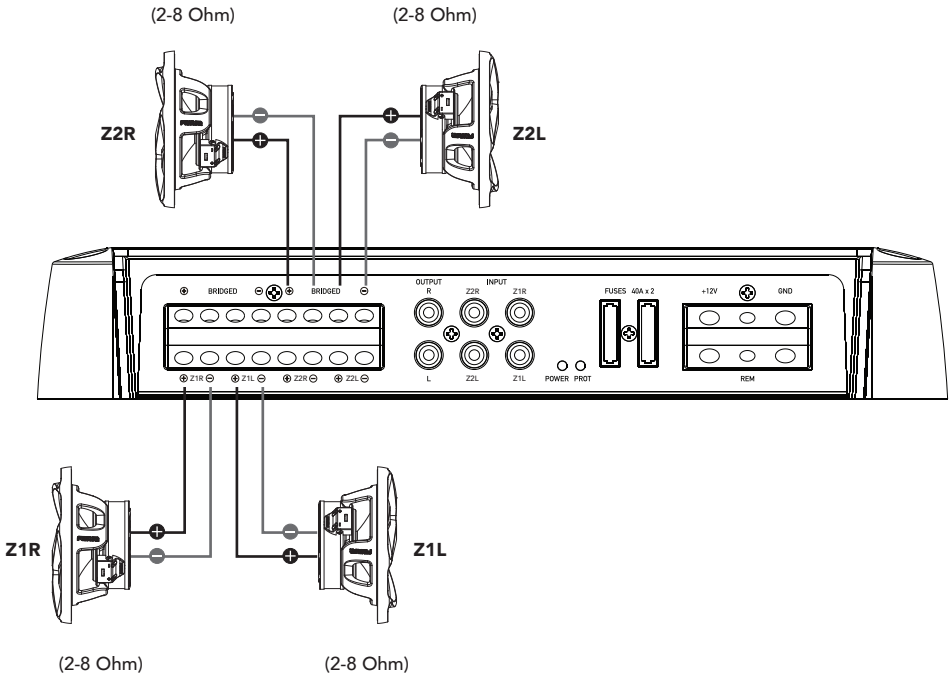

TECH TIPS

BASIC TOOLS

In any installation these basic tools may be required. For custom type installations, additional tools may be neccesary.

- Electric drill
- Crimping tool
- Allen key set
- Wire strippers
- Utility knife, sabre saw, jigsaw, nibbler
- Flat blade screwdriver
- Electrical tape
- Phillips screwdriver
- Silicon sealant

OHMS LAW SIMPLIFIED

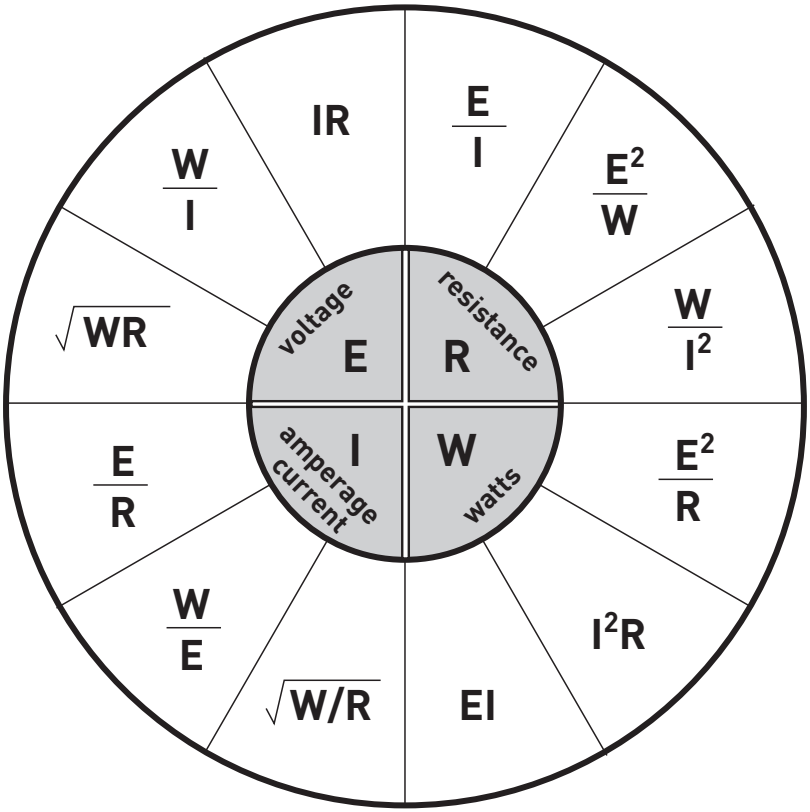

SERIES AND PARALLEL SUBWOOFER WIRING FOR DUAL VOICE COIL SUBWOOFERS

PARALLEL VOICE COIL WIRING (2 OHM OPERATION)

To wire a 4 Ohm DVC subwoofer in parallel to get 2 Ohm, use two short pieces of speaker wire and link the positive from one coil to the positive of the second coil, and do the same for the negative as shown below. Then wire the amplifier to opposite sides of the subwoofer in order to equalise any connection resistance.

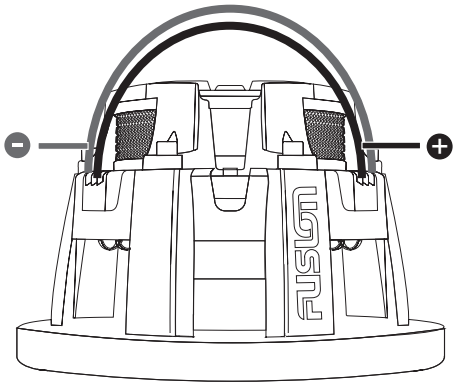

2 Ohm operation

SERIES VOICE COIL WIRING (8 OHM OPERATION)

To wire a 4 Ohm DVC subwoofer in series to get 8 Ohms, use one short piece of speaker wire and link the positive from one voice coil to the negative of the second coil as shown below. Then wire the amplifier to opposite sides of the subwoofer.

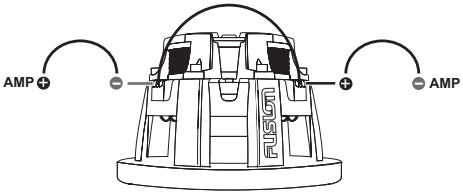

8 Ohm operation

PARALLEL WIRING FORMULA FOR 2 SPEAKERS

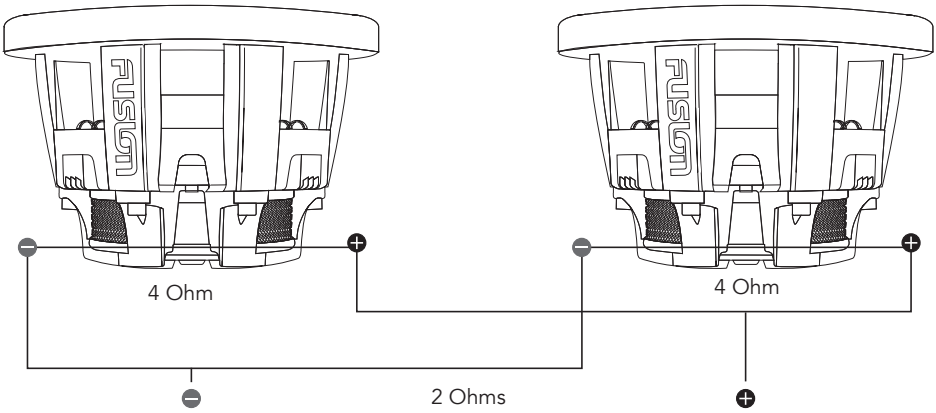

$$\frac{R1 \times R2}{R1 + R2} = \text{LOAD IMPEDANCE} \qquad \frac{4\ \text{Ohms} \times 4\ \text{Ohms}}{4\ \text{Ohms} + 4\ \text{Ohms}} = \frac{16}{8} = 2\ \text{Ohms}$$

SERIES WIRING FORMULA FOR 2 SPEAKERS

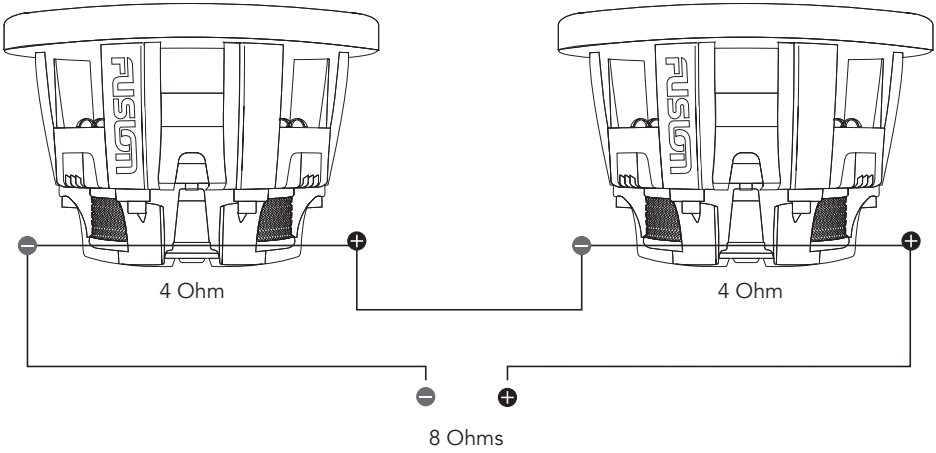

$$R1 + R2 = \text{LOAD IMPEDANCE}$$

RECORD YOUR PURCHASE DETAILS HERE:

SERIAL NUMBER

DATE OF PURCHASE

AFFIX RECEIPT HERE

REGISTER YOUR PRODUCT ONLINE:

For your own peace of mind, register your product purchase

online at **FUSIONENTERTAINMENT.COM**

This product is backed by a 3 Year Limited Consumer Warranty

FUSION®

FUSIONENTERTAINMENT.COM

For further product and installation information, please visit FUSIONENTERTAINMENT.COM
Pour plus d'informations sur les produits et l'installation, rendez-vous sur FUSIONENTERTAINMENT.COM
Para obtener más información acerca de los productos y de su instalación, visite el sitio web FUSIONENTERTAINMENT.COM
Bezoek www.fusionelectronics.com voor meer product- en installatie-informatie.
Weitere Produkt- und Installationsinformationen finden Sie unter FUSIONENTERTAINMENT.COM
Per ulteriori informazioni sui prodotti e la loro installazione, potete visitare FUSIONENTERTAINMENT.COM
Для получения дополнительной информации о продуктах и установке зайдите, пожалуйста, на: FUSIONENTERTAINMENT.COM

WARNING: Audio Systems can produce sound levels over 135dB. Continuous exposure to sound pressure levels over 100dB may cause permanent hearing loss! USE COMMON SENSE!

FUSION SUPPORT

New Zealand	09 369 2900
Australia	1300 736 012
Europe	+44 (0) 870 8501242
USA	623 580 9000
Pacific	+64 9 369 2900

© 2015 Garmin Ltd. or its subsidiaries

Garmin®, the Garmin logo, and the FUSION® logo are trademarks of Garmin Ltd. or its subsidiaries, registered in the USA and other countries.
FUSION is a trademarks of Garmin Ltd. or its subsidiaries. These trademarks may not be used without the express permission of Garmin. Other trademarks and trade names are those of their respective owners.
All rights reserved. Specifications and design are subject to change without notice.
YOU CAN HELP PROTECT THE ENVIRONMENT! Please remember to respect the local regulations: Hand in the non-working electrical equipment to an appropriate waste disposal center.

FUSIONENTERTAINMENT.COM

190-02020-00 Rev A
OCTOBER 2015

Printed in China