PYLE®

PLCD11MRKT

OWNER'S MANUAL

Mobile Audio System

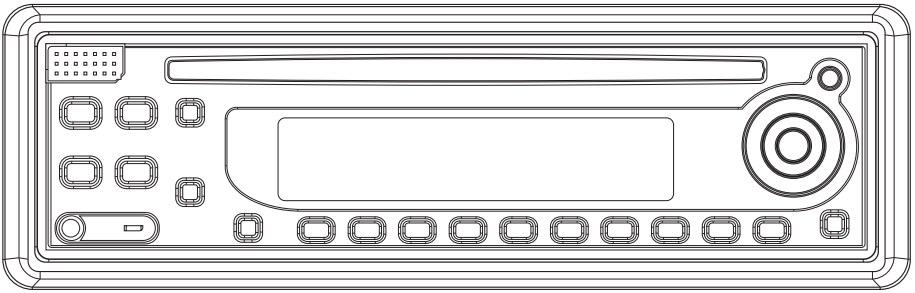

- MP3/CD Player
- PLL Synthesizer Stereo Radio
- Compact Disc Player
- Automatic Memory Storing
- Full Detachable Panel
- Preset Equalization
- Electronic Shockproof (ESP) Function
- Auxiliary Input Function
- Remote Control

www.pyleaudio.com

CONTENTS

Installation 3
Take out screw before installation.....3
DIN Front-Mount (Method A) 3
Installing the unit.....3
Removing the unit.....4
DIN Rear-Mount (Method B) 5
Using the detachable front panel 6
Wiring Connection 7
Operation 8
Location of keys.....8
Switching on/off the unit 9
Faceplate release.....9
Sound adjustment.....9
Loudness 9
DISPLAY.....9
Mute 9
Equalization.....9
Display (8) 9
Auxiliary input.....9
Remote sensor.....9
ESP Function 9
Reset function.....9
Radio operation 10
Switching to radio mode.....10
Selecting the frequency band.....10
Selecting station 10
Automatically memory storing & program scanning 10
Station storing 10
Local/distant 10
Mono/stereo 10
CD operation.....10
Switching to CD mode.....10
Selecting tracks 10
Pausing playing 10
Previewing all tracks.....10
Repeating the same track.....10
Playing all tracks in random.....11
Ejecting a disc 11
MP3 operation 11
Switching to CD (MP3) mode..... 11
Ejecting a disc..... 11
Selecting tracks in single step..... 11
Pausing playing..... 11
Previewing all tracks 11
Repeating the same track 11
Playing all tracks in random 11
Selecting tracks by AMS/D-AUD button 11
Display information 12
WMA operation 12
Remote Control Handset 13
Disc notes 14
Specification..... 15
Trouble shooting 16

INSTALLATION

Notes:

- Choose the mounting location where the unit will not interfere with the normal driving function of the driver.
- Before finally installing the unit, connect the wiring temporarily and make sure it is all connected up properly and the unit and the system work properly.
- Use only the parts included with the unit to ensure proper installation. The use of unauthorized parts can cause malfunctions.
- Consult with your nearest dealer if installation requires the drilling of holes or other modifications of the vehicle.
- Install the unit where it does not get in the driver's way and cannot injure the passenger if there is a sudden stop, like an emergency stop.
- If installation angle exceeds 30˚ from horizontal, the unit might not give its optimum performance.

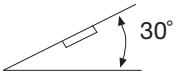

- Avoid installing the unit where it would be subject to high temperature, such as from direct sunlight, or from hot air, from the heater, or where it would be subject to dust, dirt or excessive vibration.

DIN FRONT/REAR-MOUNT

This unit can be properly installed either from "Front" (conventional DIN Front-mount) or "Rear" (DIN Rear-mount installation, utilizing threaded screw holes at the sides of the unit chassis).
For details, refer to the following illustrated installation methods.

TAKE OUT SCREW BEFORE INSTALLATION

Before install the unit, please remove the two screws.

Take out screw before installation

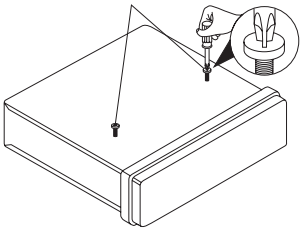

DIN FRONT-MOUNT (Method A)

Installation Opening

This unit can be installed in any dashboard having an opening as show below:

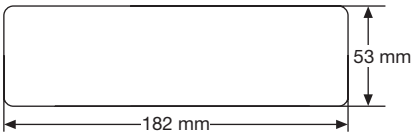

Installing the unit

Be sure you test all connections first, and then follow these steps to install the unit.

1. Make sure the ignition is turned off, and then disconnect the cable from the vehicle battery's negative (-) terminal.
2. Disconnect the wire harness and the antenna.
3. Press the release button on the front panel and remove the control panel (see the steps of "removing the front panel").
4. Lift the top of the outer trim ring then pull it out to remove it.
5. The two supplied keys release tabs inside the unit's sleeve so you can remove it. Insert the keys as far as they will go (with the notches facing up) into the appropriate slots at the middle left and right sides of the unit. Then slide the sleeve off the back of the unit.

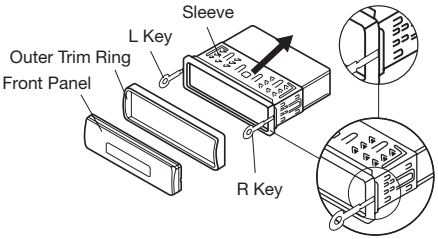

6. Mount the sleeve by inserting the sleeve into the opening of the dashboard and bend open the tabs located around the sleeve with a screwdriver. Not all tabs will be able to make contact, so examine which ones will be most effective. Bending open the appropriate tabs behind the dashboard to secure the sleeve in place.

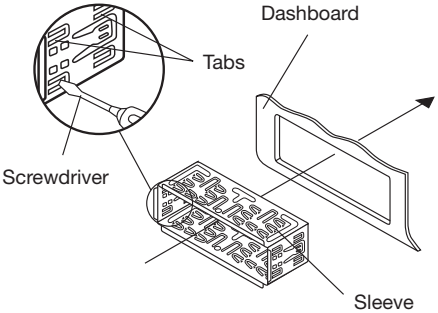

7. Reconnect the wire harness and the antenna and be careful not to pinch any wires or cables.
8. Slide the unit into the sleeve until it locks into place.
9. To further secure the unit, use the supplied metal strap to secure the back of the unit in place. Use the supplied hardware (Hex Nut (M5mm) and Spring Washer) to attach one end of the strap to the mounting bolt on the back of the unit. If necessary, bend the metal strap to fit your vehicle's mounting area. Then use the supplied hardware (Tapping Screw (5x25mm) and Plain Washer) to attach the other end of metal strap to a solid metal part of the vehicle under the dashboard. This strap also helps ensure proper electrical grounding of the unit.
Note to install the short threading terminal of the mounting bolt to the back of the unit and the other long threading terminal to the dashboard.

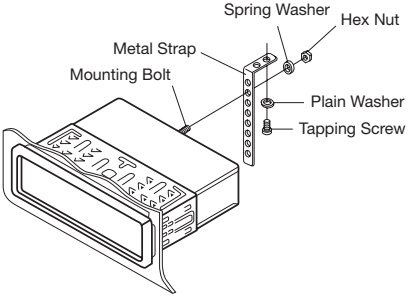

10. Reconnect the cable to the vehicle battery's negative (-) terminal. Then replace the outer trim ring and install the unit's front panel. (see the steps of “installing the front panel”).

Removing the unit

1. Make sure the ignition is turned off, then disconnect the cable from the vehicle battery's negative (-) terminal.
2. Remove the metal strap attached the back of the unit (if attached).
3. Press the release button to remove the front panel.
4. Lift the top of the outer trim ring then pull it out to remove it.
5. Insert both of the supplied keys into the slots at the middle left and right sides of the unit, then pull the unit out of the dashboard.

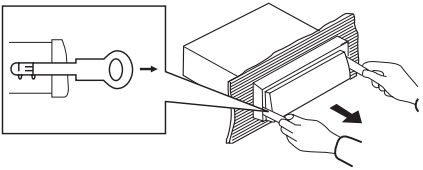

DIN REAR-MOUNT (Method B)

If your vehicle is a Nissan, Toyota, follow these mounting instructions.
Use the screw holes marked T (Toyota), N (Nissan) located on both sides of the unit to fasten the unit to the factory radio mounting brackets supplied with your vehicle.

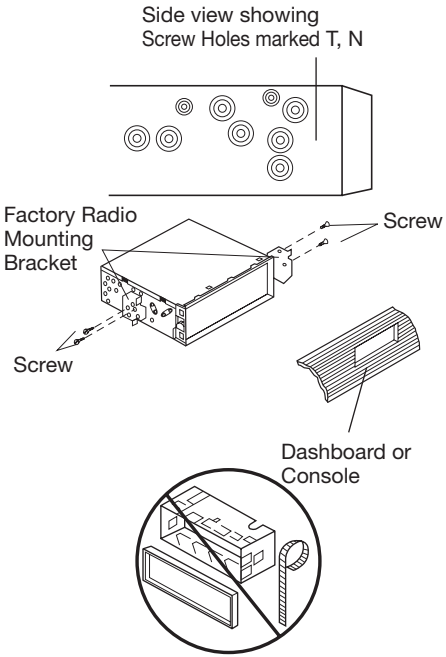

To fasten the unit to the factory radio mounting brackets.
Align the screw holes on the bracket with the screw holes on the unit, and then tighten the screws (5x5mm) on each side.

Note: the outer trim ring, sleeve and the metal strap are not used for method B installation.

USING THE DETACHABLE FRONT PANEL

REMOVING THE FRONT PANEL

1. Press the release button **(RELEASE)** on the front panel and pull off the front panel.

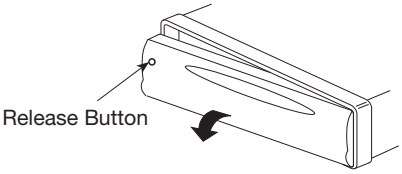

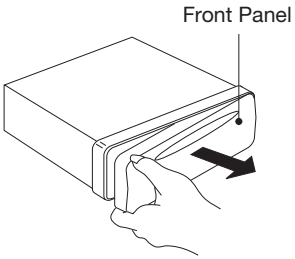

2. Keep front panel into the case.

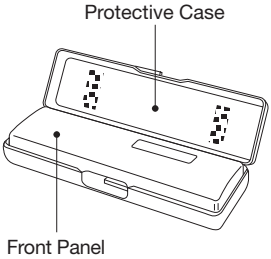

INSTALLING THE FRONT PANEL

To install the front panel, insert the panel into the housing and make sure the panel is properly installed. Otherwise, abnormality occurs on the display or some keys will not function properly.

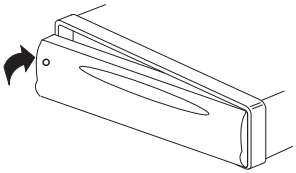

Precautions when handing

1. Do not drop the front panel.
2. Do not put pressure on the display or control buttons when removing or installing the front panel.
3. Do not touch the contacts on the front panel or on the main unit body. It may result in poor electrical contact.
4. If any dirt or foreign substances adhered on the contacts, they can be removed with a clean and dry cloth.
5. Do not expose the front panel to high temperatures or direct sunlight in anywhere.
6. Keep away any volatile agents (e.g. benzene, thinner, or insecticides) from touching the surface of the front panel.
7. Do not attempt to disassemble the front panel.

WIRING CONNECTION

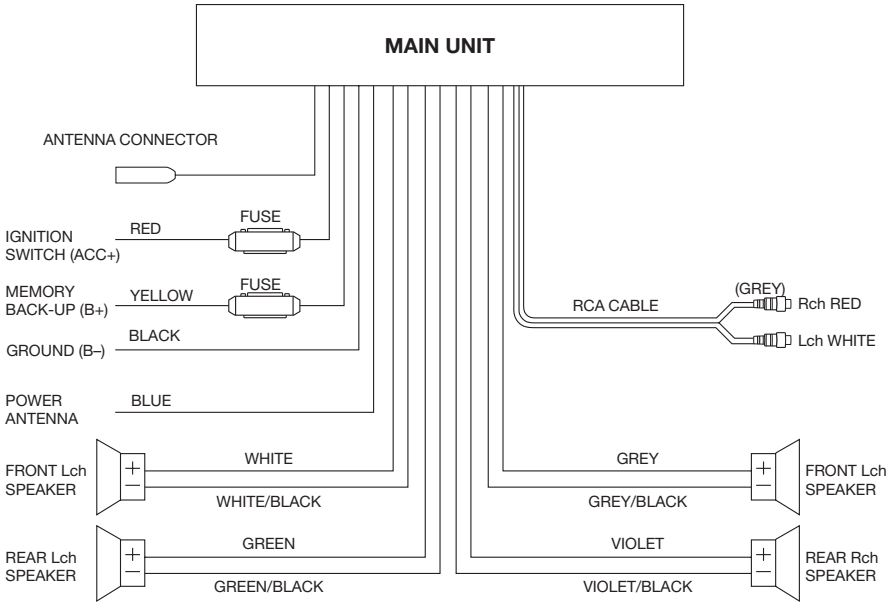

OPERATION

LOCATION OF KEYS

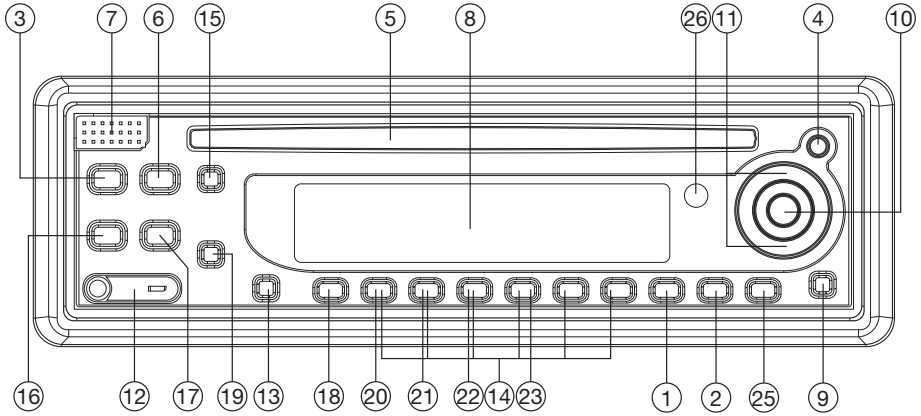

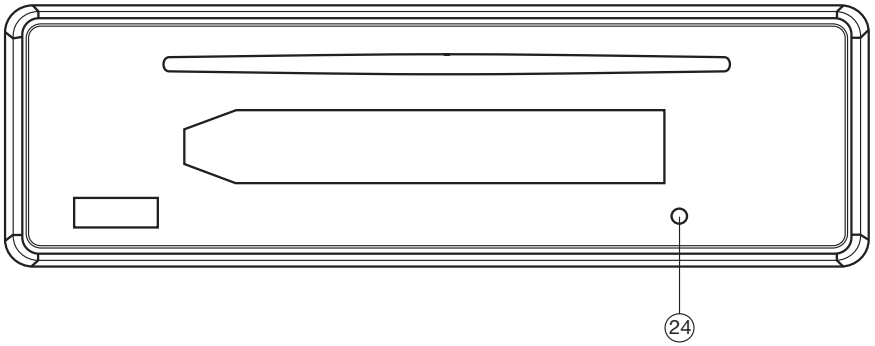

OPERATION

SWITCHING ON/OFF THE UNIT

Switch on the unit by pressing any button (except ⏏ button (7) and ▲ button (4)). When system is on, press ⏻ button (9) to turn off the unit.

FACEPLATE RELEASE

Press ⏏ button (7) to detach the removable faceplate.

SOUND ADJUSTMENT

Press **SEL** button (10) to select the desired adjustment mode. The adjustment mode will change in the following order:

Pressing the **VOL +/-** button (11), it is possible to adjust the desired sound quality.

Press and hold the **SEL** button (10) for several seconds to enter into the selection for the situation of beep sound, then press the **VOL** +/- (11) to select as follows:

- BEEP 2'nd mode:
  The beep is only generated when all allowed double function button is pressed long (several seconds).
  e.g.
  When preset button is pressed.
  When **BND/LOUD** button (13) is pressed.
  When **AMS** button (18) is pressed.
- BEEP ALL mode:
  The beep is generated when every key is pressed.
- BEEP OFF mode:
  The beep is disabled.

LOUDNESS

Press **BND/LOUD** button (13) for several seconds to reinforce the bass output. Press it for several seconds again to release this function.

DISPLAY

Press the **DISP** button (15), the clock is shown on the display. Then hold down the button until the clock flashes. Then press the ⏭ button (17) to change hours or ⏮ button (16) to change minutes.

MUTE

In radio and AUX mode, press **MUTE** button (3) to mute down sound. Press it again to release this mode and recover previous volume level.

EQUALIZATION

Press **EQ** button (19) to turn on equalization function and to select desired audio mode. There are five kinds of mode as below:

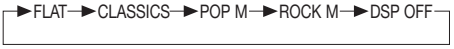

DISPLAY (8)

Exhibit current frequency and activated functions on the display (8).

AUXILIARY INPUT

The unit can be connected to a portable audio player through the **AUX IN** jack (12).

REMOTE SENSOR

Point the remote control handset to the remote sensor **IR** (26). Press the function keys on the handset to control the system.

ESP FUNCTION

If the unit has the electronic shockproof function, it can be shockproof about several tens of seconds.

RESET FUNCTION

RESET button (24) must be activated with either a ballpoint pen or thin metal object.

The **RESET** button is to be activated for the following reasons:

- Initial installation of the unit when all wiring is completed.
- All the function buttons do not operate.
- Error symbol on the display.

Note: If press **RESET** button (24), the unit can't work yet, please use a cotton swab soaked in isopropyl alcohol to clean the socket on the front panel.

OPERATION

RADIO OPERATION

- **SWITCHING TO RADIO MODE**
  Press **MODE** button (6) shortly to select radio mode, the radio mode appears in the display together with the memory band and frequency.

- **SELECTING THE FREQUENCY BAND**
  At radio mode, press **BND/LOU (ENT)** button (13) shortly to select the desired band.
  The reception band will change in the following order:

  ►FM1►FM2►FM3►AM

- **SELECTING STATION**
  Press ►► button (17) or ◄◄ button (16) shortly to activate automatic seek function. Press for several seconds until **"MANUAL"** appears on the display, the manual tuning mode is selected. If both buttons have not been pressed for several seconds, they will return to seek tuning mode and **"AUTO"** appears on the display.

- **AUTOMATIC MEMORY STORING & PROGRAM SCANNING**
  - Automatic memory storing
    Press **AMS (D-AUD)** button (18) for several seconds, the radio searches from the current frequency and checks the signal strength until one cycle search is finished. And then 6 strongest stations are stored into the corresponding preset number button.
  - Program scanning
    Press **AMS (D-AUD)** button (18) shortly to scan preset station. When the field strength level is more than the threshold level of stop level, the radio is holding at that preset number for several seconds with release mute, then searches again.

- **STATION STORING**
  Press any one of the preset buttons (14) (1 to 6) to select a station, which had been stored in the memory. Press this button for several seconds (until 2ND beeps come out), current station is stored into the number button.

- **LOCAL/DISTANT**
  Press **LOC** button (2) to select between local and distant stations. Local setting for reception of strong station, and a distant setting for reception of weaker stations. This function is effect during AUTO SEEK operation.

- **MONO/STEREO**
  Press **MON/ST** button (1) to select mono or stereo mode. You can sometimes improve reception of distant stations by selection mono operation.

CD OPERATION

- **SWITCHING TO CD MODE**
  If there is no CD inserted in the driver:
  Gently insert the CD with the printed side uppermost into the CD compartment until you feel some resistance. The CD is drawn into the driver automatically. CD playback begins.
  If a CD is already inserted in the driver:
  Keep pressing **MODE** button (6) shortly until the CD mode display appears.

- **SELECTING TRACKS**
  Press ◄◄ button (16) or ►► button (17) to move to the previous track or the following track. Track number shows on display.
  Hold ◄◄ button (16) or ►► button (17) to fast reverse or fast forward. CD play starts from when you release the button.

- **PAUSING PLAYING**
  Press ►/II button (20) to pause CD player. Press it again to resume play.

- **PREVIEWING ALL TRACKS**
  Press **SCN** button (21) to play first several seconds of each track on the current disc. Press it again to stop intro and listen to track.

- **REPEATING THE SAME TRACK**
  Press **RPT** button (22) to continuously repeat the same track. Press it again to stop repeat.

- **PLAYING ALL TRACKS IN RANDOM**
  Press **SHF** button (23) to play all tracks on CD in random order. Press again to cancel the function.

- **EJECTING A DISC**
  Press ⏏ button (4) to stop CD playing and eject the disc from the disc slot (5).

MP3 OPERATION (FOR WITH MP3 OPERATION VERSION ONLY)

- **SWITCHING TO CD (MP3) MODE**
  If there is no MP3 disc inserted in the driver:
  Gently insert the MP3 disc with the printed side uppermost into the disc slot (5) until you feel some resistance. The MP3 disc is drawn into the driver automatically. The MP3 playback begins.
  If a MP3 disc is already inserted in the driver:
  Keep pressing **MOD** button (6) shortly until the CD (MP3) mode display appears.

- **EJECTING A DISC**
  Press ⏏ button (4) to stop MP3 playing and eject the disc from the disc slot (5).

- **SELECTING TRACKS IN SINGLE STEP**
  Press ◀◀ button (16) or ▶▶ button (17) to move to the previous track or the following track. Track number shows on display.

- **PAUSING PLAYING**
  Press **PAU** button (20) to pause MP3 player. Press it again to resume play.

- **PREVIEWING ALL TRACKS**
  Press **SCN** button (21) to play first several seconds of each track on the current disc. Press again to stop intro and listen to track.

- **REPEATING THE SAME TRACK**
  Press **RPT** button (22) to continuously repeat the same track. Press it again to stop repeat.

- **PLAYING ALL TRACKS IN RANDOM**
  Press **SHF** button (23) to play all tracks on MP3 disc in random order. Press again to cancel the function.

- **SELECTING TRACKS BY AMS/D-AUD BUTTON**
  AMS (D-AUD) button is assigned as Digital Audio Mode selection button in MP3 operation. When pressed, it is activated as selecting each mode of Digital Audio. “Searching track directly” => “Searching Directory or File Name”=> “Navigation” from root by **TUNE/TRACK UP/DOWN** buttons => “Navigation” from current directory by **TUNE/TRACK UP/DOWN** buttons.

- **Searching Track Directly**
  Press **AMS (D-AUD)** button for one time. It enters into “Searching track directly” in Digital Audio CD.
  The unit searches the track selected by following direct numeric buttons: **M1-M6, MOD (7), TUNE/TRACK DOWN (8), TUNE/TRACK UP (9), DSP(0)**.
  If selected three digits, the unit searches the track at once. If selected one or two digits, the unit wait for **ENT (BND/LOU)** button for seconds. The unit searches the track after few seconds, even if the enter button is not pressed.

- **Searching Directory or File Name**
  Press **AMS (D-AUD)** button for two times. It enters into “Searching Directory or File Name” in Digital Audio CD.
  The unit searches files and directories that have the same character which is inputted by the user pressing the corresponding buttons listed on the Table 1 below.
  Explain as follows:
  - Use the corresponding buttons to select the characters A to Z, blank, 0 to 9, _, -, +.
  - Press **PUSH SEL** button to confirm entry of each characters.
  - Press **BND/LOU (ENT)** button to start the title search.

  In case the selected title is a directory name, display will show

(‘ ‘), then
- Use the **TUNE/TRACK UP/DOWN** buttons to list all songs under this directory and select the title.
- Press **BND/LOU (ENT)** button to confirm and start the play.
- Repeat the above steps if the newly selected title is again a directory.

- **Searching From Root Directory**
  Press **AMS (D-AUD)** button for three times. The unit searches file or directory from root by **TUNE/TRACK UP/DOWN** buttons. (D-DIR icon turns on if the name is directory).
  Display will list all available directories and songs. Select the desired directory/songs by using **TUNE/TRACK UP/DOWN** buttons and **BND/LOU (ENT)** button to confirm. If the selected title is a song, it starts to play. If the selected title is a directory name, display will show (‘ ‘), then
  - Use the **TUNE/TRACK UP/DOWN** buttons to list all songs under this directory and select the title.
  - Press **BND/LOU (ENT**) button to confirm and start the play.
  - Repeat the above steps if the newly selected title is again a directory.
- **Searching From Current Directory**
  Press **AMS (D-AUD)** button for four times. The unit searches file or directory from current directory by **TUNE/TRACK UP/DOWN** buttons. (D-DIR icon turns on if the name is directory). The current directory name is displayed for a second and the currently playing file name is displayed (selected). The user can select the directory or file in the directory by **TUNE/TRACK UP/DOWN** buttons. The selected file can be played by pressing **BND/LOU (ENT)** button.

- **DISPLAY INFORMATION**
  Press **DISP** button to show the following information, such as the clock, ID3 TAG (if available: song title, directory name, artist name, other contents…) (FOR WITH MP3 ID3 FUNCTION VERSION ONLY) and other information.

AMS	Mode Select
BND/LOU	ENTER
M1	A, B, C, 1
M2	D, E, F, 2
M3	G, H, I, 3
M4	J, K, L, 4
M5	M, N, O, 5/ Directory DOWN
M6	P, Q, R, 6/ Directory UP
MODE	S, T, U, 7
TUNE/SEEK/ TRACK DOWN	V, W, X, 8
TUNE/SEEK/ TRACK UP	Y, Z, SPACE, 9
SEL	CHARACTER SHIFT RIGHT
DISP	_, –, +, 0
VOL +/-	CHARACTER SELECT (A, B - 8, 9, 0)

VOL +/- & TUNE/SEEK/TRACK UP/DOWN buttons:
Searching file and directory during Navigation.

WMA OPERATION

The unit that can play the WMA disc and the operation is the same with MP3 operation described above.

REMOTE CONTROL HANDSET

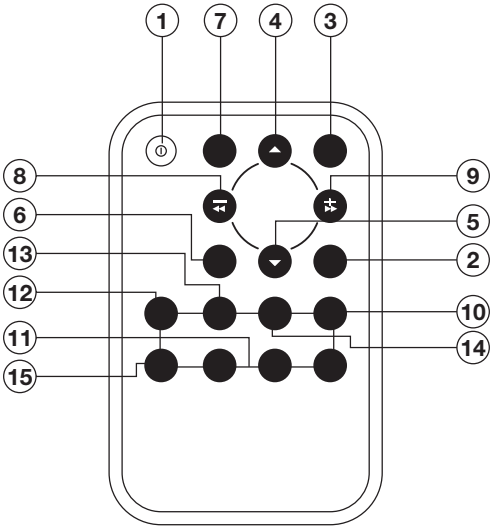

FUNCTION KEYS & CONTROL

1.	⏻ PWR	Power ON/OFF Button
2.	DSP (0)	Display Button (_,-,+,0 For MP3/WMA Operation)
3.	SEL	Sound Mode Select Button (Character Shift Right For MP3/WMA Operation)
4.	VOL ▲	Volume Up Button (Character Select (A, B~8,9,0) For MP3/WMA Operation)
5.	VOL ▼	Volume Down Button (Character Select (A,B~8,9,0) For MP3/WMA Operation)
6.	BND (LOU/ENT)	Band Select Button (When pressed shortly) Loudness Button (When pressed long) (Enter Button For MP3/WMA Operation)
7.	MODE (7)	Mode Button (S, T, U, 7 For MP3/WMA Operation)
8.	TUNE/SKIP/CH ⏮ (8)	Tune/SKIP Down Button (V, W, X, 8 For MP3/WMA Operation)
9.	TUNE/SKIP/CH ⏭ (9)	Tune/SKIP Up Button (Y, Z, SPACE, 9 For MP3/WMA Operation)
10.	AS/PS (D-AUD)	Automatic Memory Storing & Program Scanning Button (Mode Select Button For MP3/WMA Operation)
11.	M1 - M6	Preset Buttons (A~R, 1~6 For MP3/WMA Operation)
12.	PAU	Pause Button (A, B, C, 1 For MP3/WMA Operation)
13.	SCN	Scanning Button (D, E, F, 2 For MP3/WMA Operation)
14.	RPT	Repeat Button (G, H, I, 3 For MP3/WMA Operation)
15.	SHF	Shuffle Button (J, K, L, 4 For MP3/WMA Operation)

DISC NOTE

A. Notes on discs:

1. Attempting to use non-standard shape discs (e.g. square, start, heart) may damage the unit. Be sure to use round shape CD discs only for this unit.
2. Do not stick paper or tape etc., onto the label side or the recording side of any discs, as it may cause a malfunction.
3. Dirt, dust, scratches and warping discs will cause misoperation.

B. Notes on CD-Rs (recordable CDs)/CD-RWs (rewritable CDs):

1. Be sure to use discs with following marks only for the unit to play:

2. The unit cannot play a CD-R and CD-RW that is not finalized. (Please refer to the manual of your CD-R/CD-RW recorder or CD-R/CD-RW software for more information on finalization process).
3. Depending on the recording status, conditions of the disc and the equipment used for the recording, some CD-Rs/CD-RWs may not be played on this unit. (See *1)

*1: To have more reliable play back, please see following recommendations:

a. Use CD-RWs with speed 1x to 4x and write with speed 1x to 2x.
b. Use CD-Rs with speed 1x to 8x and write with speed 1x to 2x.
c. Do not play a CD-RW which has been written for more than 5 times.

C. Notes on MP3 files (MP3 Version Only):

1. The disc must be in the ISO9660 level 1 or level 2 format, or Joliet or Romeo in the expansion format.
2. When naming a MP3 file, be sure the file name extension is “.MP3”.
3. For a non-MP3 file, even though the file name extension is “.MP3”, the unit cannot recognize it.

SPECIFICATION

GENERAL

Power Supply Requirements	: DC 12 Volts, Negative Ground
Chassis Dimensions	: 178 (W) x 160 (D) x 50 (H)
Tone Controls	
- Bass (at 100 Hz)	: ± 10 dB
- Treble (at 10 KHz)	: ± 10 dB
Maximum Output Power	: 4 x 25 Watts
Current Drain	: 5 Ampere (max.)

CD PLAYER

Signal to Noise Ratio	: More than 55 dB
Channel Separation	: More than 45 dB
Frequency Response	: 40 Hz - 18 KHz

RADIO

	FM
Frequency Coverage	: 87.5 to 107.9 MHz
IF	: 10.7 MHz
Sensitivity (S/N = 30 dB)	: 4 μV
Stereo Separation	: > 25 dB

	AM
Frequency Coverage	: 530 to 1710 KHz
IF	: 450 KHz
Sensitivity (S/N = 20 dB)	: 36 dBu

TROUBLE SHOOTING

Before going through the check list, check wiring connection. If any of the problems persist after check list has been made, consult your nearest service dealer.

Symptom	Cause	Solution
No power.	The car ignition switch is not on.	If the power supply is connected to the car accessory circuits, but the engine is not moving, switch the ignition key to “ACC”.
	The fuse is blown.	Replace the fuse.
Disc cannot be loaded or ejected.	Presence of CD disc inside the player.	Remove the disc in the player, then put a new one.
	Inserting the disc in reverse direction.	Insert the compact disc with the label facing upward.
	Compact disc is extremely dirty or defective disc.	Clean the disc or try to play a new one.
	Temperature inside the car is too high.	Cool off or until the ambient temperature return to normal.
	Condensation.	Leave the player off for an hour or so, then try again.
No sound.	Volume is in minimum.	Adjust volume to a desired level.
	Wiring is not properly connected.	Check wiring connection.
Sound skips.	The installation angle is more than 30 degrees.	Adjust the installation angle less than 30 degrees.
	The disc is extremely dirty or defective disc.	Clean the compact disc, then try to play a new one.
The operation keys do not work.	The built-in microcomputer is not operating properly due to noise.	Press the RESET button. Front panel is not properly fixed into its place.
The radio does not work. The radio station automatic selection does not work.	The antenna cable is not connected.	Insert the antenna cable firmly.
	The signals are too weak.	Select a station manually.